ORIGINAL ARTICLE

INTERNATIONAL JOURNAL OF ARTIFICIAL INTELLIGENCE

ISSN: 2692-515-x, Impact Factor: 9.23

American Academic publishers, volume 6, issue 01,2026

Journal: https://www.academicpublishers.org/journals/index.php/ijai

IMPROVEMENT OF CLEANING METHODS OF USED MOTOR OILS TO REDUCE THE NEGATIVE IMPACT ON THE ENVIRONMENT

M.B. Umarova,

Kh.L. Pulatov

Tashkent institute of chemical technology

Abstract

The increasing consumption of lubricating oils in automotive and industrial sectors has led to a significant rise in the generation of used motor oils, which pose serious environmental and health risks if improperly managed. Used motor oils contain hazardous contaminants such as heavy metals, polycyclic aromatic hydrocar, oxidation products, and degraded additives that can pollute soil, water, and air. This study focuses on the improvement of cleaning and regeneration methods for used motor oils in order to reduce their negative impact on the environment and promote sustainable resource management. Modern purification techniques, including mechanical separation, adsorption, membrane filtration, chemical treatment, and combined physicochemical processes, are analyzed and compared in terms of efficiency, economic feasibility, and environmental safety. Special attention is given to innovative low-waste and energy-efficient technologies that allow the recovery of base oil components while minimizing secondary pollution. The results indicate that the integration of advanced filtration and adsorption methods significantly enhances oil quality and extends its service life, thereby reducing the volume of hazardous waste. The implementation of improved cleaning methods for used motor oils contributes to environmental protection, supports circular economy principles, and decreases dependence on virgin petroleum resources.

Keywords: used motor oil, oil regeneration, environmental protection, cleaning methods, adsorption, filtration, waste oil recycling

In the experimental research workshop, research work was carried out on polyacrylates from used motor oils (WMO). The refractive index of the obtained heptyl acrylate ether (HA) was determined using a refractometer No. DR301-95. The molecular mass and density of the obtained HA ether, as well as its solubility in solvents such as ethanol, acetone, DMF and benzene, were also determined.

ORIGINAL ARTICLE

INTERNATIONAL JOURNAL OF ARTIFICIAL INTELLIGENCE

ISSN: 2692-515-x, Impact Factor: 9.23

American Academic publishers, volume 6, issue 01,2026

Journal: https://www.academicpublishers.org/journals/index.php/ijai

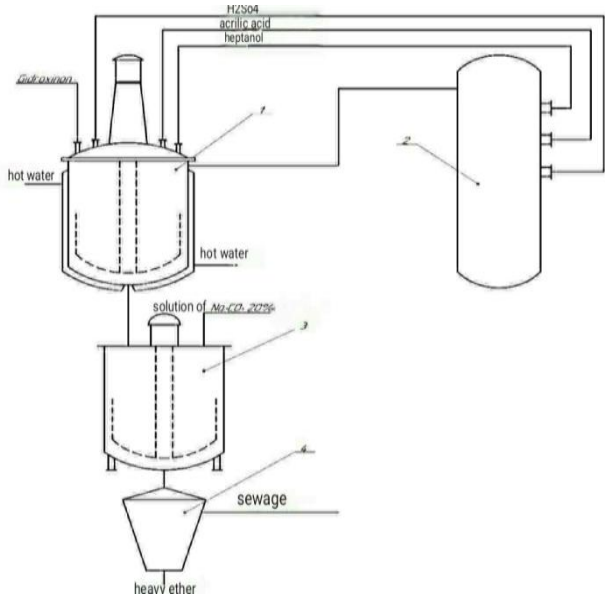

Fig. 1. Technological scheme of heptyl acrylate ether production: 1 reactor, 2 rectification column, 3 mixer, 4 separator.

1-A method for cleaning used motor oils (WMO) from mechanical impurities was developed, including using various loCal filters (polyester (TLFT-5 brand), Belting BF, Sleanel filter (basalt + cellulose + macalatura), which increased the cleanliness of WMO by 20%.

2-Research work was carried out in the experimental research workshop on the purification of used motor oils. The quality indicators of the used ADDINOL 10W-40 Semi Synth semi-synthetic motor oil (oil mileage 7000 km) were determined (samples for testing - 1.5 l).

Table 3

Environmental conditions during the experiment

	Naming of indicators	Units of measurement.	Experience testing methods on NX	Quality parameters according to the technical specifications of ADDINOL 10W-40 Semi Synth	Experimental test results
		мм ^{2}/c	GOST 33	12,5-16,3 between	15,21
	Kinematic viscosity at 100 °C	мм ^{2}/c	GOST 33	-	114,94
	Kinematic viscosity at 40 °C	-	GOST 25371	110 not less than	138
	viscosity index	mg KOH/1 g	GOST 11362	8,7	2,78
.	Total alkaline number	%	GOST 2477	no	no

ORIGINAL ARTICLE

INTERNATIONAL JOURNAL OF ARTIFICIAL INTELLIGENCE

ISSN: 2692-515-x, Impact Factor: 9.23

American Academic publishers, volume 6, issue 01,2026

Journal: https://www.academicpublishers.org/journals/index.php/ijai

.	Water content	°C	GOST 4333 Method B	230	219
.		кг/м^3	GOST 3900	863	867
.		мг/кг	GOST 6370	no	0,125
.	Open crucible flash point	-	GOST 29188.1	-	opaque black liquid (with mechanical impurities)

The quality parameters for the synthetic motor oil used, Liqui Moly 5W-40 Synthoil High Tech, were determined. (oil mileage 7500 km (number of samples for testing - 0.5 liters).

Table 2.

Environmental conditions during the experiment

	Naming of indicators	Ўлчов бирликл.	Тажриба синов усуллари НХ бўйича	Liqui Moly 5W-40 Synth oil High Tech и/ч.нинг техник хусусиятларига мувофиқ сифат параметрлари	Тажриба синов натижалари
.		m m^2/s	GOST 33	12,5-16,3 оралиғида	14,10
.	Kinematic viscosity at 100 °C	m m^2/s	GOST 33	87,0	112,65
.	Kinematic viscosity at 40 °C	-	GOST 25371	-	126
.	viscosity index	m gKOH/1 g	GOST 11362	9,15	2,41
.	Total alkaline number	%	GOST 2477	йўқ	йўқ
.	Water content	°C	GOST 4333 Method B	230	220
.		кг /м^3	GOST 3900	850	855
.		мг /кг	GOST 6370	йўқ	0,151
	Open crucible flash point	-	GOST 29188.1	-	opaque black liquid (with mechanical impurities)

ORIGINAL ARTICLE

INTERNATIONAL JOURNAL OF ARTIFICIAL INTELLIGENCE

ISSN: 2692-515-x, Impact Factor: 9.23

American Academic publishers, volume 6, issue 01,2026

Journal: https://www.academicpublishers.org/journals/index.php/ijai

The quality parameters of used ADDINOL 10W-40 Semi Synth semi-synthetic oil (mileage 7000 km) after purification with a Belting filter (with the addition of HA copolymer) (sample volume for testing - 1.5 l) were determined.

Schedule 3.

Environmental conditions during the experiment

	Naming of indicators	Units of measurement.	Таж риба синов усуллари НХ бўйича	**Quality parameters according to the technical specifications of ADDINOL 10W-40 Semi Synth**	Experimental test results
.		mm^2/s	GOST 33	12,5-16,3 between	13,12
.	Kinematic viscosity at 100oC	mm^2/s	GOST 33	-	110,10
	Kinematic viscosity at 40oC	-	GOST T 25371	110 not less than	115
	viscosity index	Mg KOH /1 g	GOST 11362	8,7	2,78
	Total alkaline number	%	GOST 2477	no	no
	Water content	^{o}C	GOST 4333 Б методи	230	223
		кг/м^3	GOST 3900	863	862
		мг/кг	GOST T 6370	no	no
	Open crucible flash point	-	GOST T 29188.1	-	Light yellow transparent liquid without mechanical impurities

The quality indicators of the used synthetic motor oil Liqui Moly 5W-40 Synthoil High Tech (mileage 700 km) were determined by filtering it using a polyester (TLFT-5 brand 100% filter (with the addition of HA copolymer) (sample volume for testing - 0.5 l).

Table 4

Environmental conditions during the experiment

ORIGINAL ARTICLE

INTERNATIONAL JOURNAL OF ARTIFICIAL INTELLIGENCE

ISSN: 2692-515-x, Impact Factor: 9.23

American Academic publishers, volume 6, issue 01,2026

Journal: https://www.academicpublishers.org/journals/index.php/ijai

	Naming of indicators	Units of measurement.	Experience testing methods on NX	**Quality parameters according to the technical specifications of Liqui Moly 5W-40 Synth oil High**	Experimental test results
.		m m^2/s	GOST 33	12,5-16,3 between	12,90
.	Kinematic viscosity at 100oC	m m^2/s	GOST 33	87,0	109,89
.	Kinematic viscosity at 40oC	-	GOST 25371	-	112
.	viscosity index	M gKOH/1 g	GOST 11362	9,15	2,41
.	Total alkaline number	%	GOST 2477	no	no
.	Water content	ºC	GOST 4333 Метод Б	230	224
.		кг $/м^3$	GOST 3900	850	852
.		мг /кг	GOST 6370	no	no
.	Open crucible flash point	-	GOST 29188.1	-	opaque black liquid (with mechanical impurities)

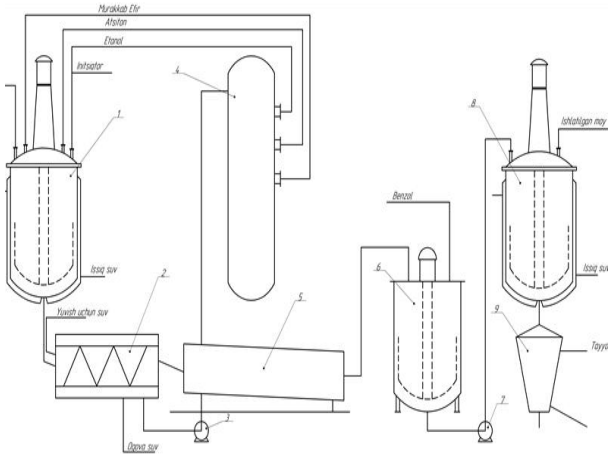

Figure 2. The main technological scheme of cleaning used motor oils

ORIGINAL ARTICLE

INTERNATIONAL JOURNAL OF ARTIFICIAL INTELLIGENCE

ISSN: 2692-515-x, Impact Factor: 9.23

American Academic publishers, volume 6, issue 01,2026

Journal: https://www.academicpublishers.org/journals/index.php/ijai

1.8-reactor, 2-drum filter, 3.7 - pumps, 4 - distillation column, 5 - drum dryer, 6 - mixer, 9-centrifuge-separator.

The GA ether copolymer prepared in the reactor (1) is fed to the filter press (2), the light volatile substances of the unreacted copolymer are filtered. The small amount of residue remaining in the filter is washed again in the filter equipment and fed to the drum dryer for refiltering and drying. After drying, the copolymer is sent to the mixer (6), dissolved in benzene and reacted in the reactor (7) through the pump (8). The used motor oil reacts at a temperature of 700C at a pressure of 1 atm, and the purified motor oil is separated using a centrifuge-separator (9).

IR-spectra and thermogravimetric analyzes (TGT) of used mineral, semi-synthetic and synthetic (unrefined and refined) motor oils were conducted.

We conducted an IR-spectroscopic analysis using a spectrophotometer manufactured by the Japanese company Shimadzu. The measurement range is 500-4000 cm-1, the determination by the Shedaga method is 5 cm-1. The spectra (2 g KVr and 9 mg of sample) were obtained using a KVr press. The average error limit is +5%.

The IR spectra of the obtained samples are presented graphically. The ordinate of the graph shows the transmission coefficient T (%) and the abscissa shows the frequency values of the IR rays incident on the sample (wave number - the number of waves per 1 cm-1 distance). Figure 3 shows the IR spectrograms of refined and unrefined mineral oil.

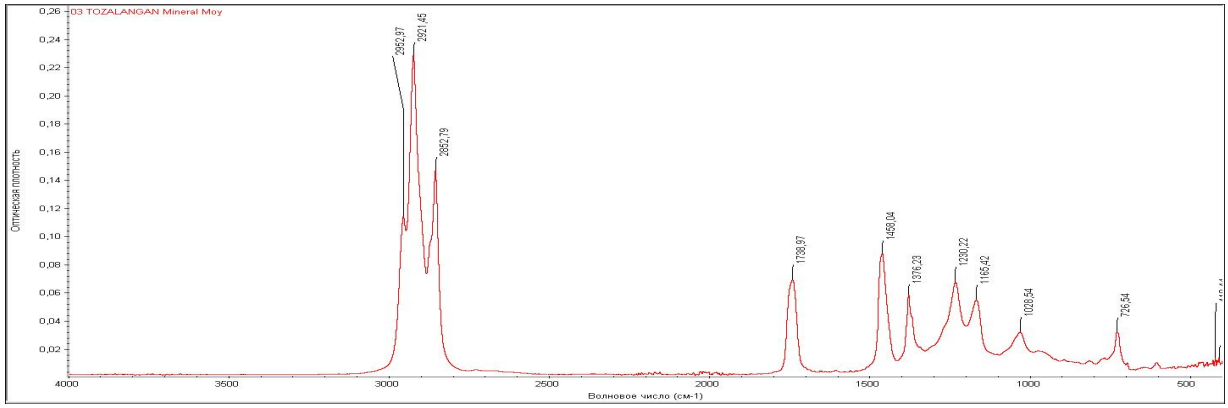

A

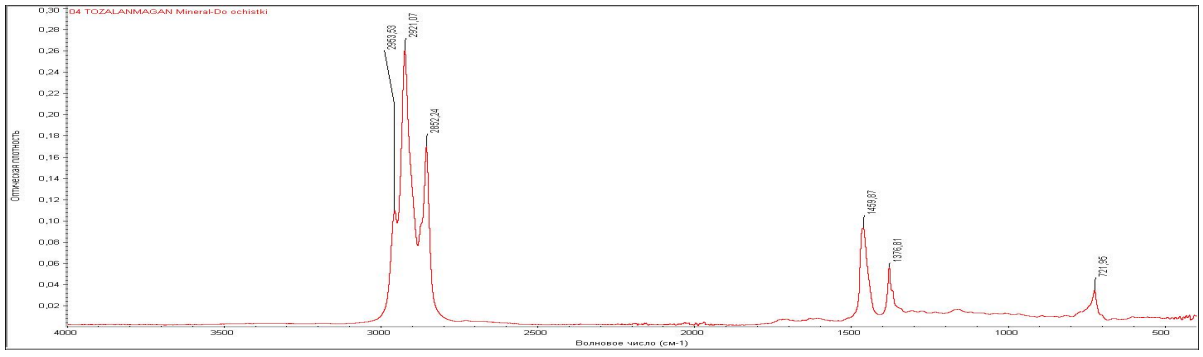

B

Figure 3. IK-spectra: A-refined mineral (petroleum) oil; B- unrefined mineral (petroleum) oil

The characteristic vibration frequencies of the functional groups were determined based on the IR spectra of purified mineral oil shown in Figure 3. Here, the entire IR spectrum is conditionally called double-bond (3500-2800 cm–1), triple-bond (2300-2100 cm-1), double-

ORIGINAL ARTICLE
INTERNATIONAL JOURNAL OF ARTIFICIAL INTELLIGENCE
ISSN: 2692-515-x, Impact Factor: 9.23
American Academic publishers, volume 6, issue 01,2026
Journal: https://www.academicpublishers.org/journals/index.php/ijai

bond (1800-1540 cm-1), and this part of the spectra is specific to each substance. In purified and untreated used motor oil, the valence vibrations of the OH group vary between molecules by 3440.03–3336.76 cm-1 and the valence bonds within the molecule by 1160.83–1059.91 cm-1.

The functional vibrations of purified mineral oil are mainly asymmetric in valence and are accompanied by strong vibrations. The functional vibrations of unrefined mineral oil are also largely asymmetric in valence, and we can see that there are no peaks in some functional groups. Thus, the difference in the functional vibrations of refined and unrefined oils is very large.

The Fourier spectrometer made it possible to determine the chemical changes in the sample by the IR spectroscopic method. In this case, the spectra were determined by pressing Qvr (2 g of Qvr and 9 mg of sample), the measurement range was determined on a 5 cm-1 detector sensor. The average error limit is +5%. The IR spectrum of the refined synthetic oil, the spectra of atoms consist of thin lines, and the spectra of molecules - of wide lines (corridors). The IR spectra of the samples obtained by us are presented graphically. The transmission coefficient T (%) is plotted on the coordinate axis of the graph, and the frequency values of the IR rays incident on the sample are plotted along the abscissa axis. The characteristic vibration frequencies of functional groups were determined based on the IR spectra of the semi-synthetic ADDINOL semi-synthetic oil, which is a curve reflecting the relationship between these two quantities. The reason why the entire IR spectrum is conventionally called double bond (3500-2800 cm-1), triple bond (2300-2100 cm-1), double bond (1800-1540 cm-1) and "fingerprints" is that this part of the spectra is specific to each substance. The characteristic vibration frequencies of functional groups observed in the IR spectra are given in Table 1. In purified and unrefined oils, the valence of the C–O group between molecules varies in the range of 1738.97–726.54 cm-1 and the valence of the molecule.

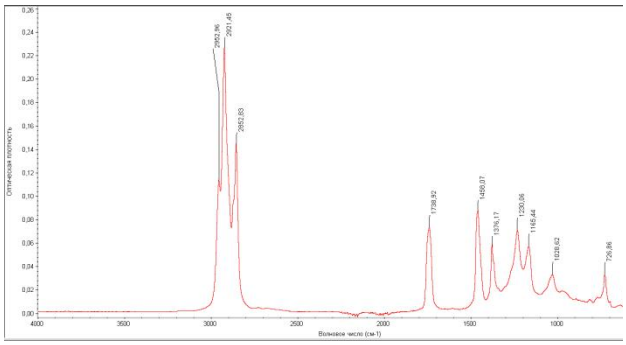

Figure 4. IR-spectrum of refined and unrefined semi-synthetic ADDINOL oil

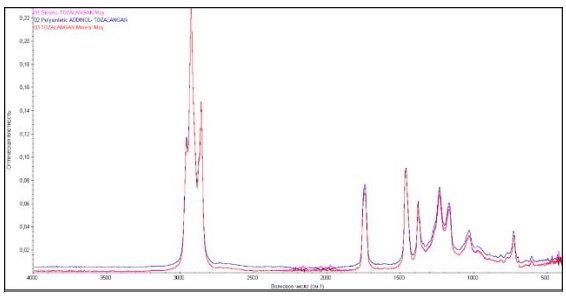

Figure 5. IK-spectrum comparative analysis of crude oils (general)

ISSN: 2692-515-x, Impact Factor: 9.23
American Academic publishers, volume 6, issue 01,2026
Journal: https://www.academicpublishers.org/journals/index.php/ijai

IR spectrum analysis shows that crude oils contain various functional groups. In particular, there are various functional groups such as 2929.83 cm-1 CH2, 2855 cm-1 CH3, 1111.12 cm-1 C=C=O (ketene type functional group), carbon halides - 642.31 cm-1. However, in refined oils we can see a significant decrease in various functional groups. This indicates the active effect of refining processes. The refining indicators showed better results in synthetic and semi-synthetic oils than in mineral oils.

REFERENCES

1. Умарова М.Б., Максумова О.С., Пулатов Х.Л.Применение разных фильтров из местного сырья для очистки отработанных моторных масел.Science and innovation international scientific journal VOLUME 1 ISSUE 7 UIF-2022: 8.2 | ISSN: 2181-3337 348-358ст.

2.E.A. Egamberdiyev, Maksumova O.S.Study of resource-saving viscosity modifiers of used oils.1st International Scientific Conference "Modern Materials Science: Topical Issues, Achievements and Innovations" (Tashkent, Mart 4-5, 2022) p. 1463-1468.